Lab 6
Title : Simulated simple PCM coder that converts samples into a digital code
Objective:
Theory

In modern communication systems, information is predominantly transmitted in digital form. This offers numerous advantages over analog transmission, including better noise immunity, easier multiplexing, simpler regeneration of signals, and compatibility with digital processing and storage. Pulse Code Modulation (PCM) is a fundamental technique used to convert analog signals into digital signals, making them suitable for digital transmission and processing.

PCM is a method used to digitally represent sampled analog signals. It is the standard form of digital audio in computers and various other digital systems. A PCM coder essentially transforms a continuous-time, continuous-amplitude analog signal into a discrete-time, discrete-amplitude digital signal. This transformation involves three primary steps:

- Sampling
- Quantization
- Encoding

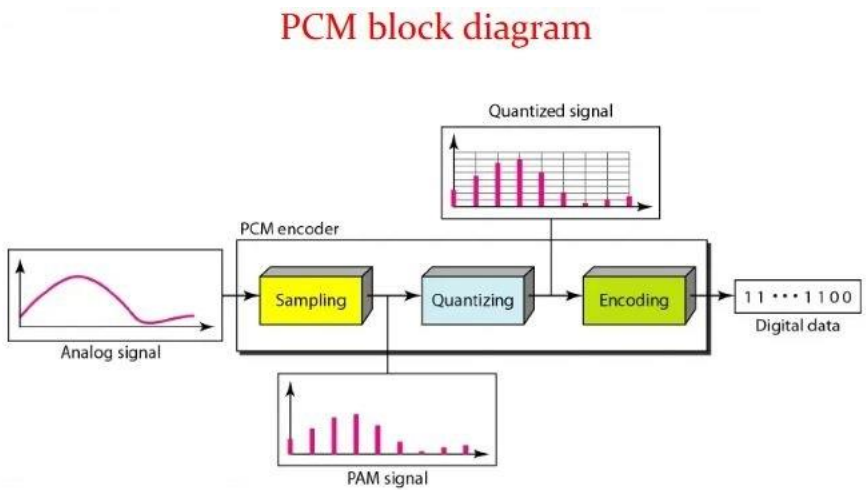

1. Sampling

Sampling is the process of converting a continuous-time analog signal into a discrete-time signal. Instead of measuring the signal's amplitude continuously, we measure it at specific, regular intervals.

Sampling Rate (fs): This is the number of samples taken per second, measured in Hertz (Hz). A higher sampling rate means more samples are taken, providing a more accurate representation of the original analog signal.

Sampling Period (Ts): This is the time interval between consecutive samples, calculated as Ts=1/f s.

Nyquist-Shannon Sampling Theorem: This crucial theorem states that to perfectly reconstruct a continuous-time analog signal from its sampled version, the sampling rate (fs) must be at least twice the highest frequency component (f_{max}) present in the original analog signal.

$$fs >= 2fm$$

2. Quantization

Quantization is the process of converting the discrete-time, continuous-amplitude sampled signal into a discrete-time, discrete-amplitude signal. Since computers and digital systems can only represent a finite number of values, each sampled amplitude value must be mapped to one of a finite set of predetermined levels.

Quantization Levels (N): This is the total number of discrete amplitude levels available for representing the sampled values. The number of levels is directly related to the number of bits (n) used for encoding:

$$N=2^n$$

forr example, if n=8 bits are used, there are 2^8 =256 quantization levels.

Quantization Step Size (Δ): This is the difference between two adjacent quantization levels. It is calculated by dividing the total amplitude range of the signal by the number of quantization levels.

$$\Delta = \frac{Vmax - Vmin}{N}$$

where Vmax and Vmin are the maximum and minimum amplitudes of the analog signal, respectively.

Quantization Error/Noise: When an analog sample is quantized, its amplitude is rounded to the nearest available quantization level. The difference between the actual sampled value and its quantized value is called quantization error or quantization noise. This error is inherent in the quantization process and cannot be eliminated, but it can be reduced by increasing the number of quantization levels (i.e., using more bits).

There are two main types of quantization:

Uniform Quantization: The quantization levels are equally spaced. This is simpler to implement and is effective for signals with a relatively uniform distribution of amplitudes.

Non-uniform Quantization: The quantization levels are not equally spaced. They are typically denser for smaller amplitudes and sparser for larger amplitudes. This is often used for speech signals, where smaller amplitudes are more common and require finer resolution to maintain quality (e.g., using A-law or μ-law companding).

3. Encoding

Encoding is the final step in the PCM process, where each quantized level is converted into a unique binary code (a sequence of bits, typically 0s and 1s).

Bit Depth (n): This refers to the number of bits used to represent each quantized sample. As mentioned, it determines the number of possible quantization levels (2^n).

Binary Representation: Each quantization level index (e.g., 0, 1, 2, ..., N−1) is assigned a unique n-bit binary code. For instance, if n=3 bits, level 0 might be '000', level 1 '001', up to level 7 '111'.

Digital Bit Stream: The sequence of these binary codes, generated for each sampled and quantized value, forms the final digital bit stream that can be transmitted, stored, or processed by digital systems.

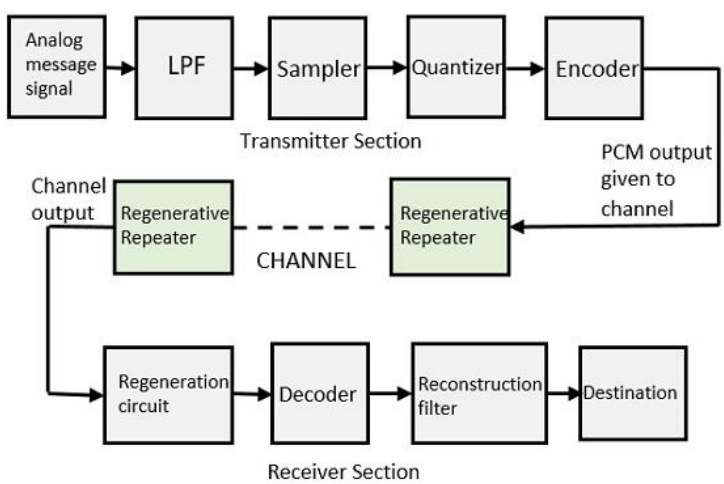

Program

```
clc;
clear;
close all;

%% Parameters
fs = 1000;                % Sampling frequency (Hz)
```

```
t = 0:1/fs:1;            % Time vector (1 second duration)
f = 5;                   % Signal frequency (Hz)
x = 1.2 * sin(2 * pi * f * t);  % Analog signal (amplitude scaled)

L = 16;                  % Number of quantization levels (4 bits)
bits = log2(L);          % Bits per sample
xmax = max(abs(x));      % Maximum amplitude for normalization

%% Quantization
x_norm = (x + xmax) / (2 * xmax);  % Normalize between 0 and 1
xq = round(x_norm * (L - 1));      % Quantize to L levels

%% Binary Encoding (PCM Coding)
pcm = dec2bin(xq, bits);  % Convert to binary strings

%% Display a few samples
disp('First 10 samples of quantized PCM codes:');
disp(pcm(1:10, :));

%% Plot 1: Original Analog Signal & Quantized Signal (Same Figure, Separate Subplots)
figure;
subplot(2, 1, 1);
plot(t, x, 'b');
title('Original Analog Signal');
xlabel('Time (s)');
ylabel('Amplitude');
grid on;

subplot(2, 1, 2);
stairs(t, xq, 'r');
title('Quantized Signal (PCM Levels)');
xlabel('Time (s)');
ylabel('Quantized Level');
grid on;

%% Plot 2: Normalized Signal (Separate Figure)
figure;
plot(t, x_norm, 'm');
title('Normalized Signal');
xlabel('Time (s)');
ylabel('Normalized Amplitude');
grid on;

%% Reconstruction (Demodulation)
xq_recon = (xq / (L - 1)) * (2 * xmax) - xmax;  % De-normalize back

%% Plot 3: Original & Reconstructed Signal (Same Figure, Separate Subplots)
figure;
subplot(2, 1, 1);
plot(t, x, 'b');
title('Original Analog Signal');
xlabel('Time (s)');
ylabel('Amplitude');
grid on;

subplot(2, 1, 2);
plot(t, xq_recon, 'r');
title('Reconstructed Signal from PCM');
xlabel('Time (s)');
ylabel('Amplitude');
grid on;
```

output

Discussion and conclusion